Creative Fabrica

Embroidery Design
Sewing Information

www.creativefabrica.com/embroidery/

© Creative Fabrica

Thread	Consumption	Name	Madeira Rayon
1	57.9% (145.2 ft, 8054 st.)	Bright White	1001
2	42.1% (105.7 ft, 8899 st.)	Black	1000

Upper thread	250.9 ft
Bobbin	83.6 ft

Note: These are the closest threads Embird 2017 was able to find. They might differ from the real colors in some cases.

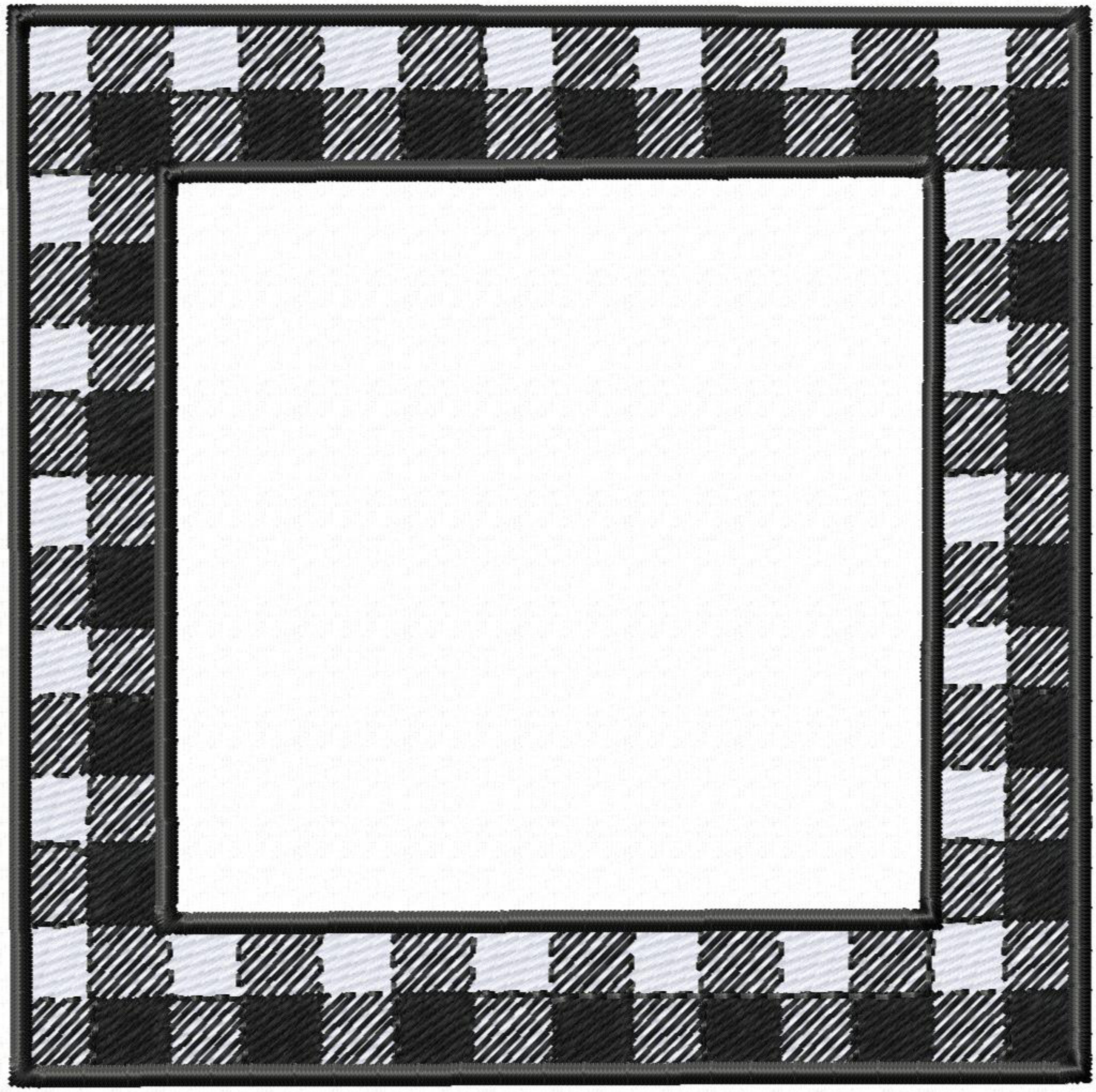

Needle	Thread consumption	
1	8054 st.	57.9% (145.2 ft)
2	8899 st.	42.1% (105.7 ft)

Upper thread	250.9 ft
Bobbin	83.6 ft

File: 3,9 x 3,9.csd (Poem, Singer EU)
Stitches: 16953
Size: 3.88 x 3.87 " (98.6 x 98.4 mm)
Begin: 1.94, 1.94 "
End: 1.94, 1.94 "
Start needle: 1
Colors: 2/2 , Stops: 1
Date: 31.10.2021

This area is reserved for your logo. Place logo.bmp file (width: 289 , height: 98 pixels) in the same folder as embird.exe file.

This area is reserved for your address information. Place address.txt text file containing your address in the same folder as embird.exe file.

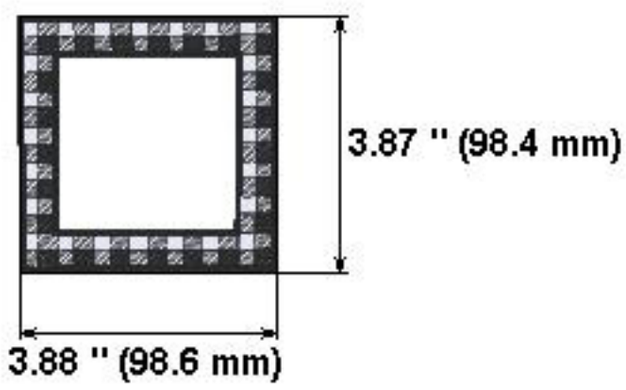

Histogram

(8055) Stop 1
(16953) End

Stitches ratio diagram:

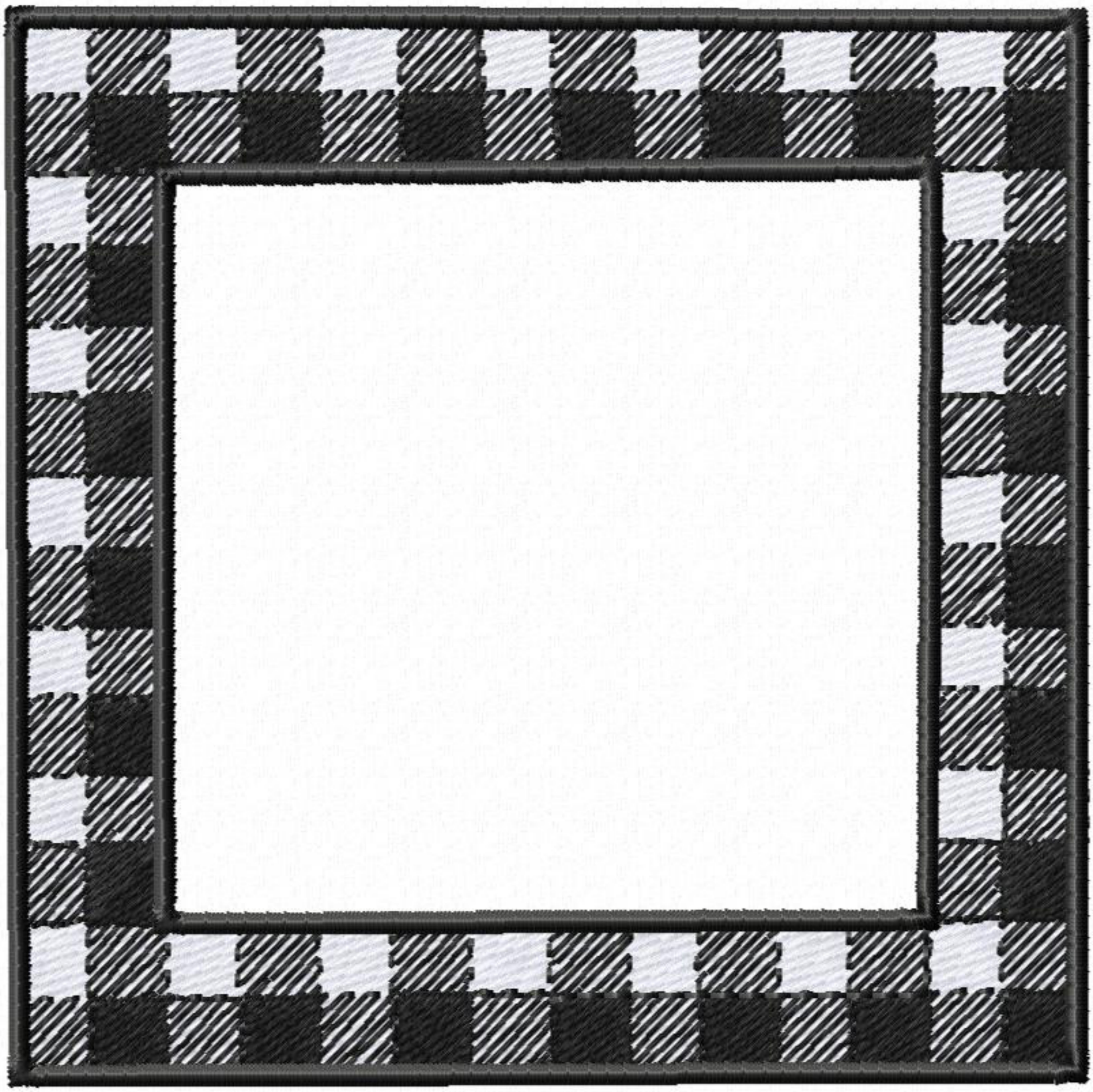

Thread	Consumption	Name	Madeira Rayon
1	60.5% (226.1 ft, 12107 st.)	Bright White	1001
2	39.5% (147.7 ft, 11790 st.)	Black	1000

Upper thread	373.9 ft
Bobbin	124.6 ft

Note: These are the closest threads Embird 2017 was able to find. They might differ from the real colors in some cases.

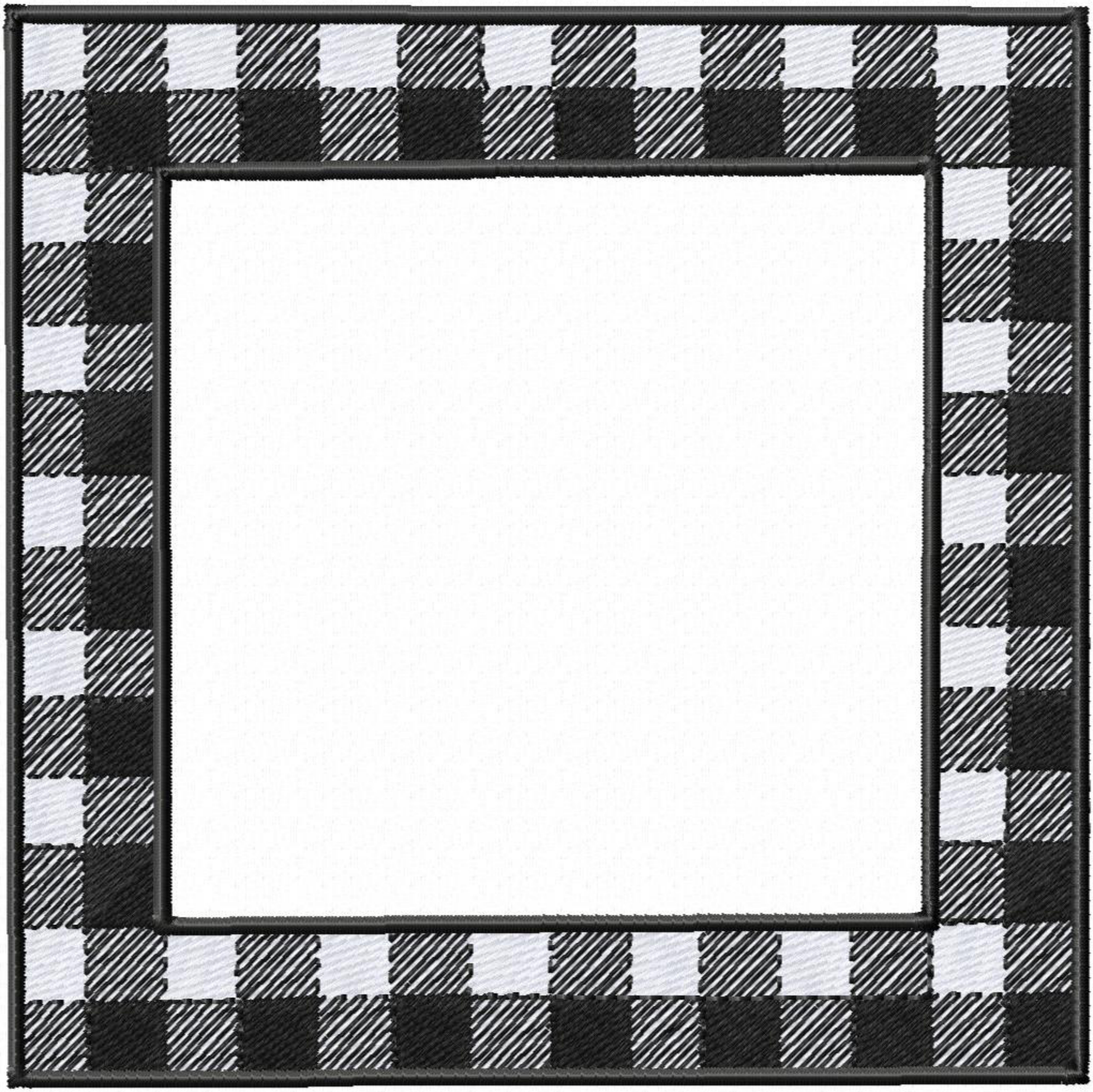

Needle	Thread consumption	
1	12107 st.	60.5% (226.1 ft)
2	11790 st.	39.5% (147.7 ft)

Upper thread	373.9 ft
Bobbin	124.6 ft

File: 4,9 x 4,9.csd (Poem, Singer EU)
Stitches: 23897
Size: 4.87 x 4.85 " (123.6 x 123.2 mm)
Begin: 2.43, 2.43 "
End: 2.43, 2.43 "
Start needle: 1
Colors: 2/2 , Stops: 1
Date: 31.10.2021

This area is reserved for your logo. Place logo.bmp file (width: 289 , height: 98 pixels) in the same folder as embird.exe file.

This area is reserved for your address information. Place address.txt text file containing your address in the same folder as embird.exe file.

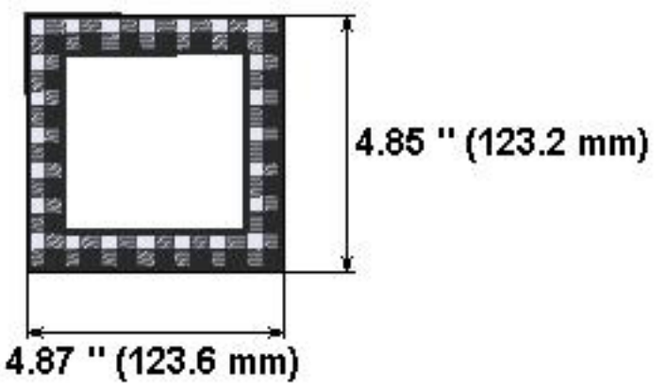

Histogram

(12108) Stop 1
(23897) End

Stitches ratio diagram:

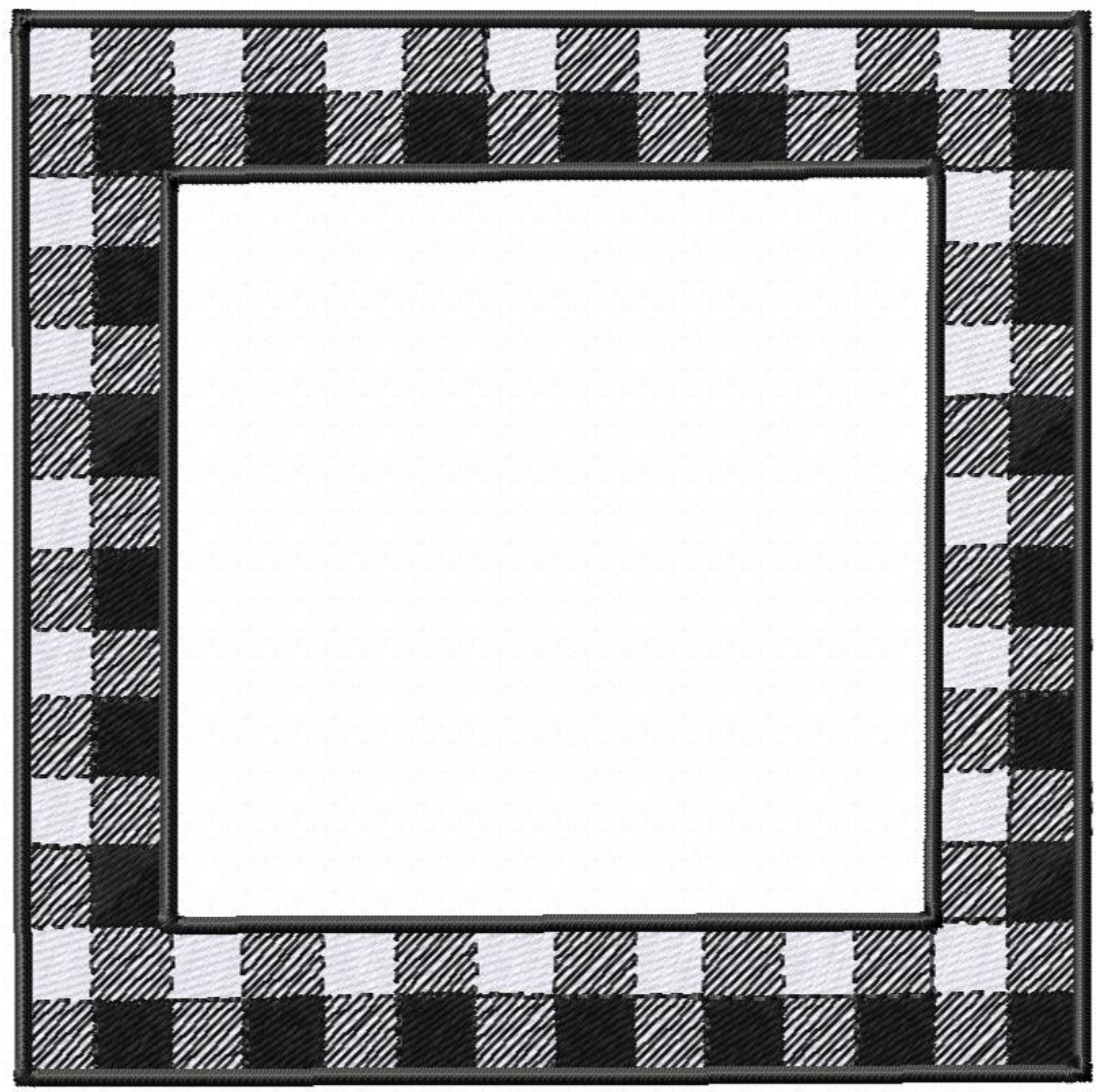

Thread	Consumption	Name	Madeira Rayon
1	60.7% (324.6 ft, 17065 st.)	Bright White	1001
2	39.3% (210.0 ft, 15091 st.)	Black	1000

Upper thread	534.6 ft
Bobbin	178.2 ft

Note: These are the closest threads Embird 2017 was able to find. They might differ from the real colors in some cases.

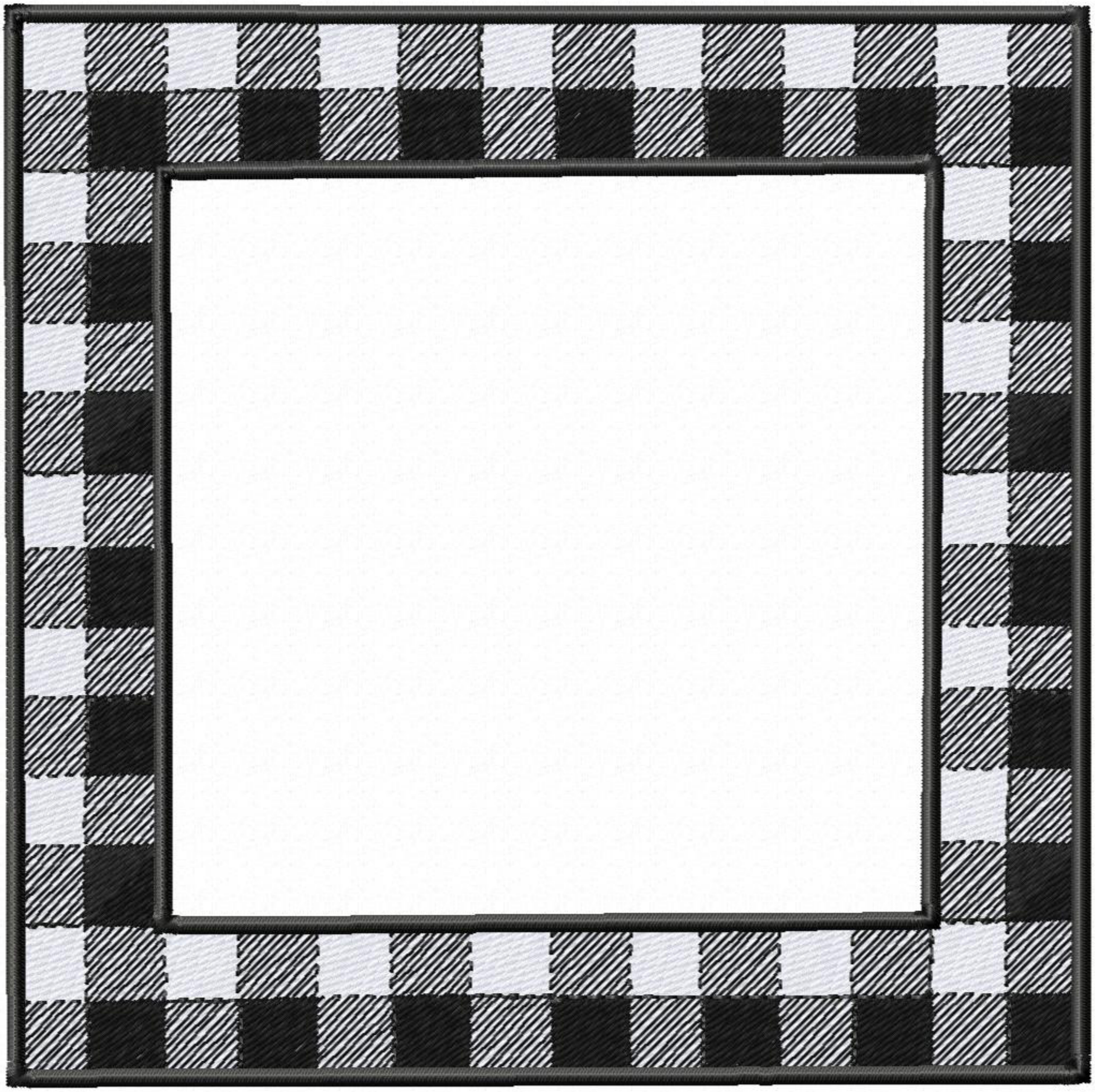

Needle	Thread consumption	
1	17065 st.	60.7% (324.6 ft)
2	15091 st.	39.3% (210.0 ft)

Upper thread	534.6 ft
Bobbin	178.2 ft

File: 5,9 x 5,9.csd (Poem, Singer EU)
Stitches: 32156
Size: 5.87 x 5.85 " (149.0 x 148.6 mm)
Begin: 2.93, 2.93 "
End: 2.93, 2.93 "
Start needle: 1
Colors: 2/2 , Stops: 1
Date: 31.10.2021

This area is reserved for your logo. Place logo.bmp file (width: 289 , height: 98 pixels) in the same folder as embird.exe file.

This area is reserved for your address information. Place address.txt text file containing your address in the same folder as embird.exe file.

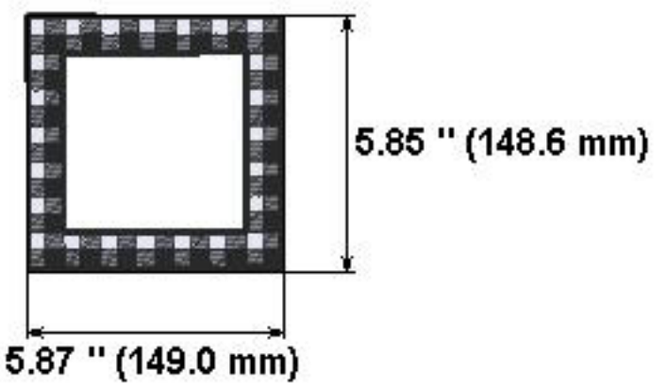

Histogram

(17066) Stop 1
(32156) End

Stitches ratio diagram:

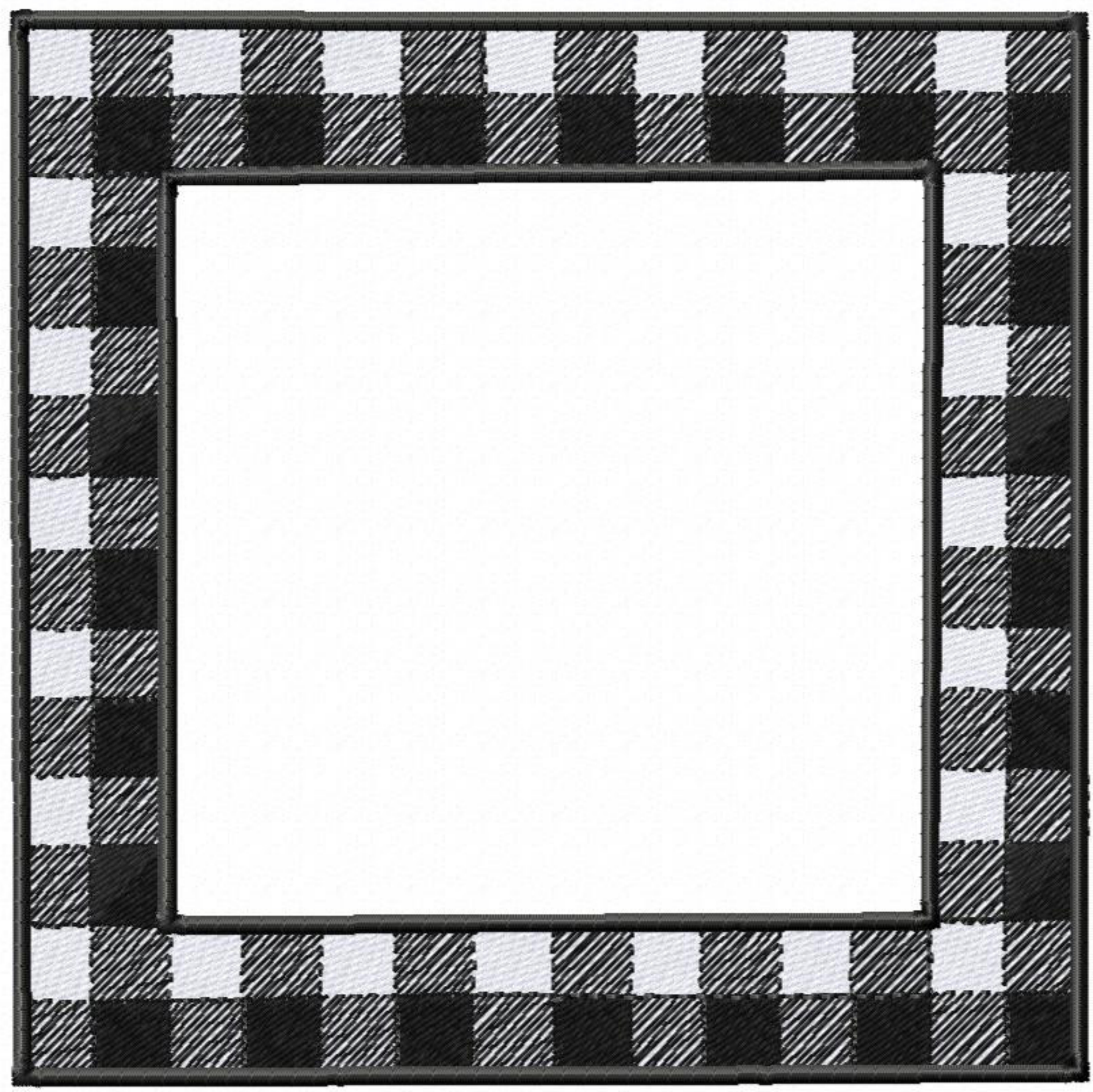

Thread	Consumption	Name	Madeira Rayon
1	61.0% (441.9 ft, 22892 st.)	Bright White	1001
2	39.0% (282.9 ft, 18596 st.)	Black	1000

Upper thread	724.8 ft
Bobbin	241.6 ft

Note: These are the closest threads Embird 2017 was able to find. They might differ from the real colors in some cases.

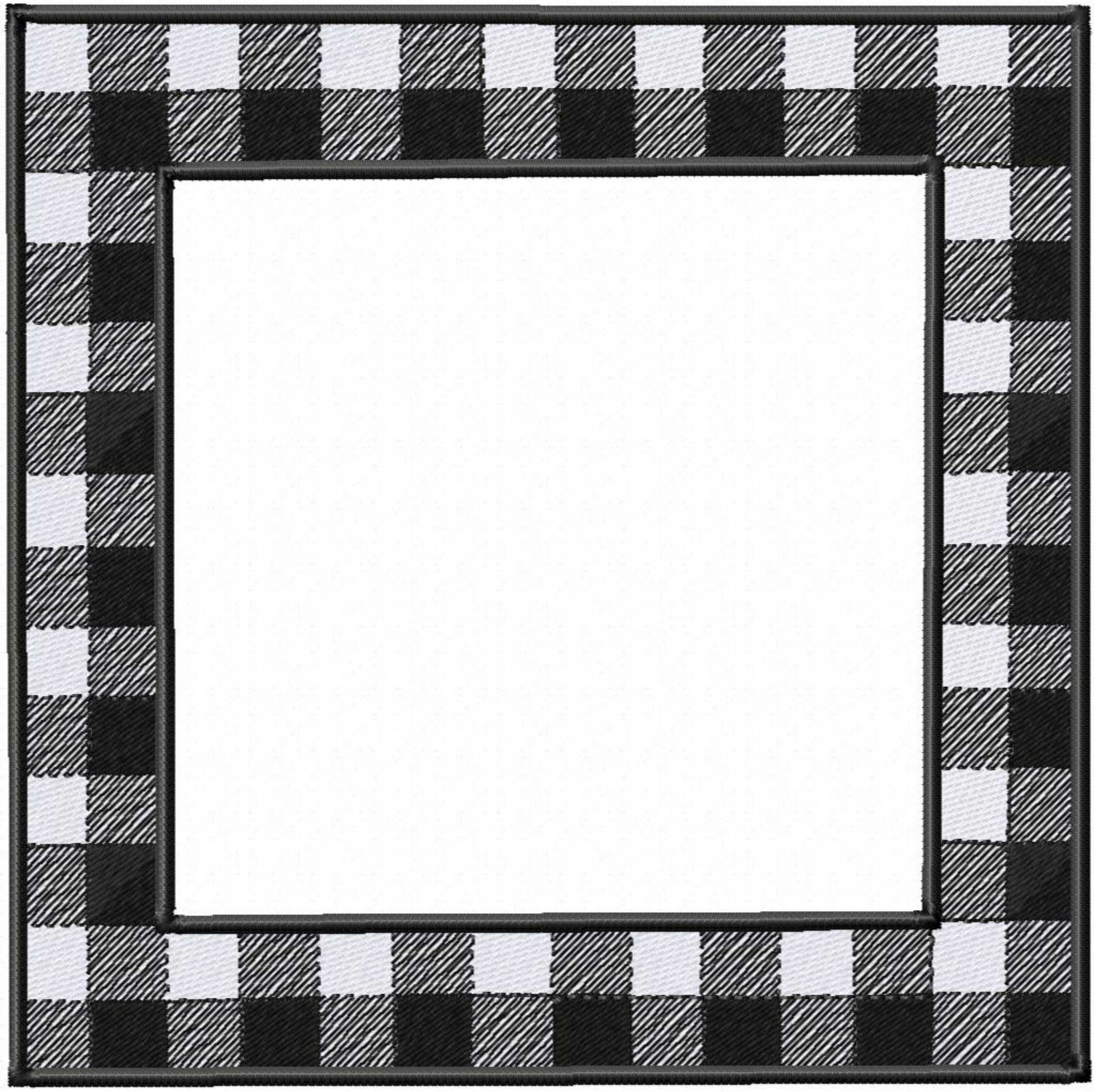

Needle	Thread consumption	
1	22892 st.	61.0% (441.9 ft)
2	18596 st.	39.0% (282.9 ft)

Upper thread	724.8 ft
Bobbin	241.6 ft

File: 6,9 x 6,9.csd (Poem, Singer EU)
Stitches: 41488
Size: 6.86 x 6.85 " (174.2 x 173.9 mm)
Begin: 3.43, 3.43 "
End: 3.43, 3.43 "
Start needle: 1
Colors: 2/2 , Stops: 1
Date: 31.10.2021

This area is reserved for your logo. Place logo.bmp file (width: 289 , height: 98 pixels) in the same folder as embird.exe file.

This area is reserved for your address information. Place address.txt text file containing your address in the same folder as embird.exe file.

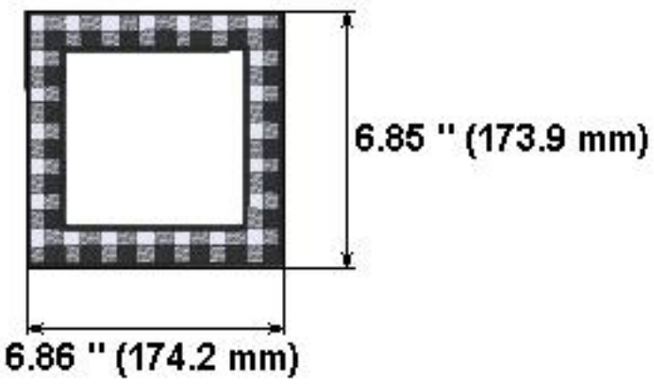

Histogram

(22893) Stop 1
(41488) End
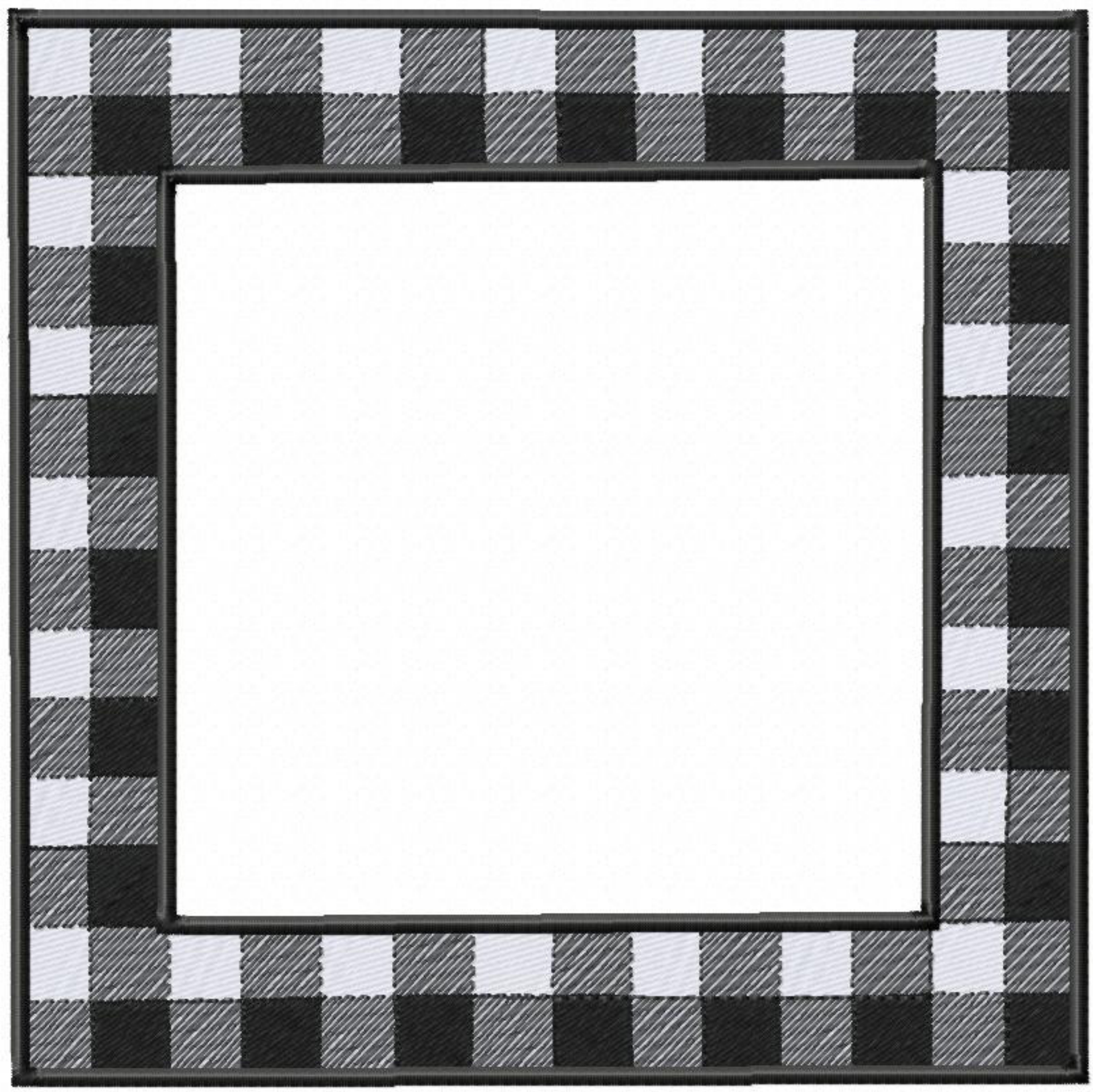
Stitches ratio diagram: